Spherical roller bearings, cylindrical and tapered bore

Principal dimensions			Basic load ratings		Speed ratings		Designation
			dynamic	static	Reference speed	Limiting speed	
d	D	B	C	C0			* SKF Explorer bearing
mm			kN		r/min		-
160	290	104	1281	1660	1500	2200	23232 CC/W33 *

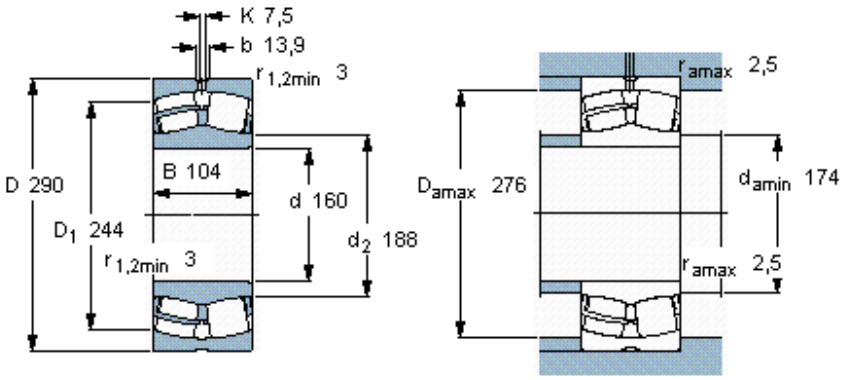

Calculation factors

e 0,35
Y_1 1,9
Y_2 2,9
Y_0 1,8